Implementation of half Adder and full Adder

Objective:

- The functionality of half-Adder and full Adder circuits through the truth table.

Theory:

Half-Adder:

A half Adder is a basic digital circuit that adds two single binary digit and produces the outputs:

- Sum (s)
- Carry (c)

It is called 'half' adder because it doesnot consider any carry input from a various addition.

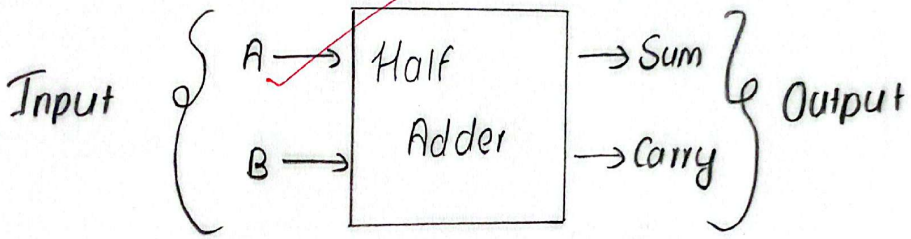

fig: half-adder (block diagram)

Truth table

Input		Output	
A	B	Carry (c)	Sum (s)
0	0	0	0
0	1	0	1
1	0	0	1
1	1	1	0

CamScanner

K-map:

A \ B	0	1
0		1
1	1	

Sum(S) : $AB' + A'B$
: $A \oplus B$

A \ B	0	1
0		
1		1

Carry : AB

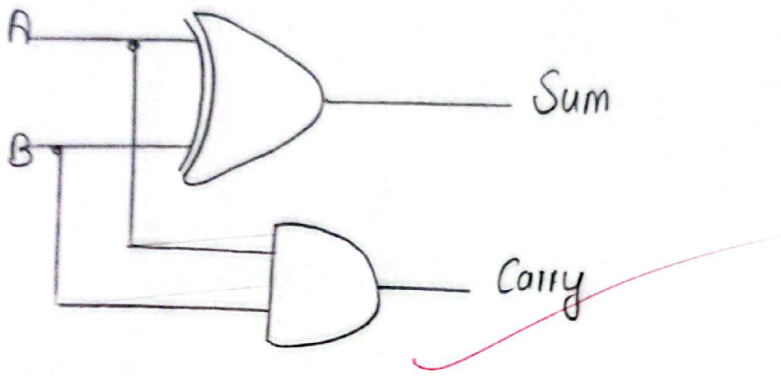

fig: Half-adder using XOR and AND gate.

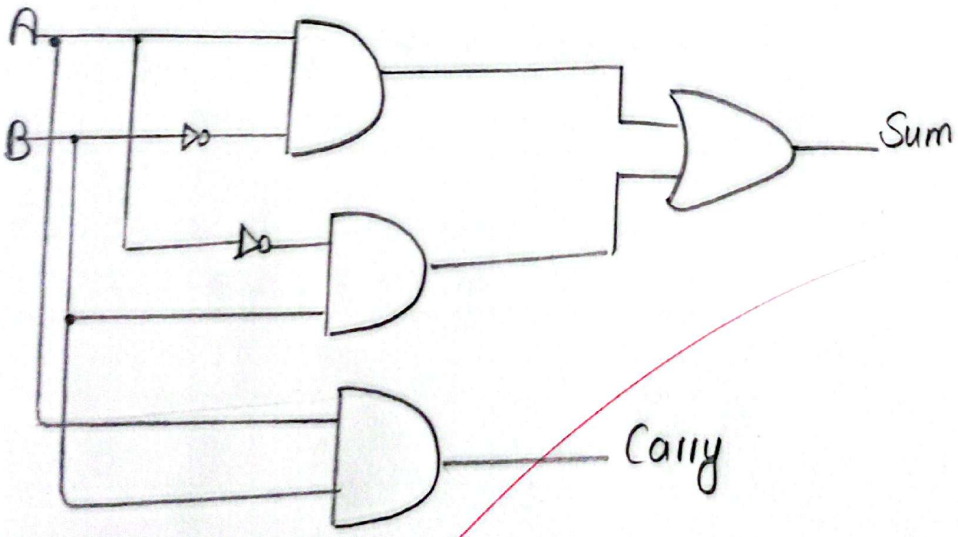

fig: logical circuit using basic Gates for half-adder

Full-adder

A full adder is a digital circuit that adds binary bits.
It is called 'full' adder because it includes the carry from the previous stage. The output carry is designated as C-OUT and the normal output is designated as S which is SUM.

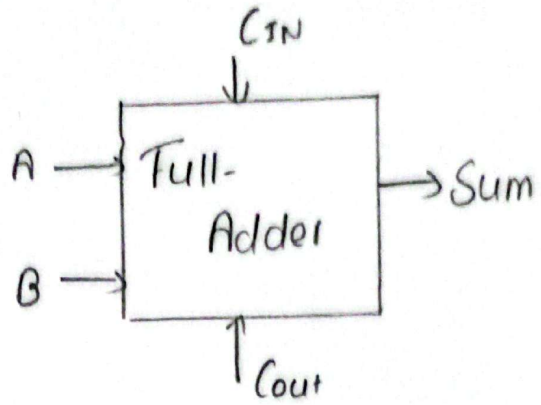

fig: full Adder (Block diagram)

Truth table

Input			Output	
A	B	C	Carry(c)	Sum(s)
0	0	0	0	0
0	0	1	0	1
0	1	0	0	1
0	1	1	1	0
1	0	0	0	1
1	0	1	1	0
1	1	0	1	0
1	1	1	1	1

CamScanner

K-map

A \ BC	00	01	11	10
0			1	
1		1	1	1

Carry (C): $BC + AC + AB$

A \ BC	00	01	11	10
0		1		1
1	1		1	

Sum(S): $A'B'C + A'BC' + AB'C' + ABC$

$= C(A'B' + AB) + C'(A'B + AB')$

$= C(A'B + AB')' + C'(A'B + AB')$

$= C \odot (A \oplus B)$

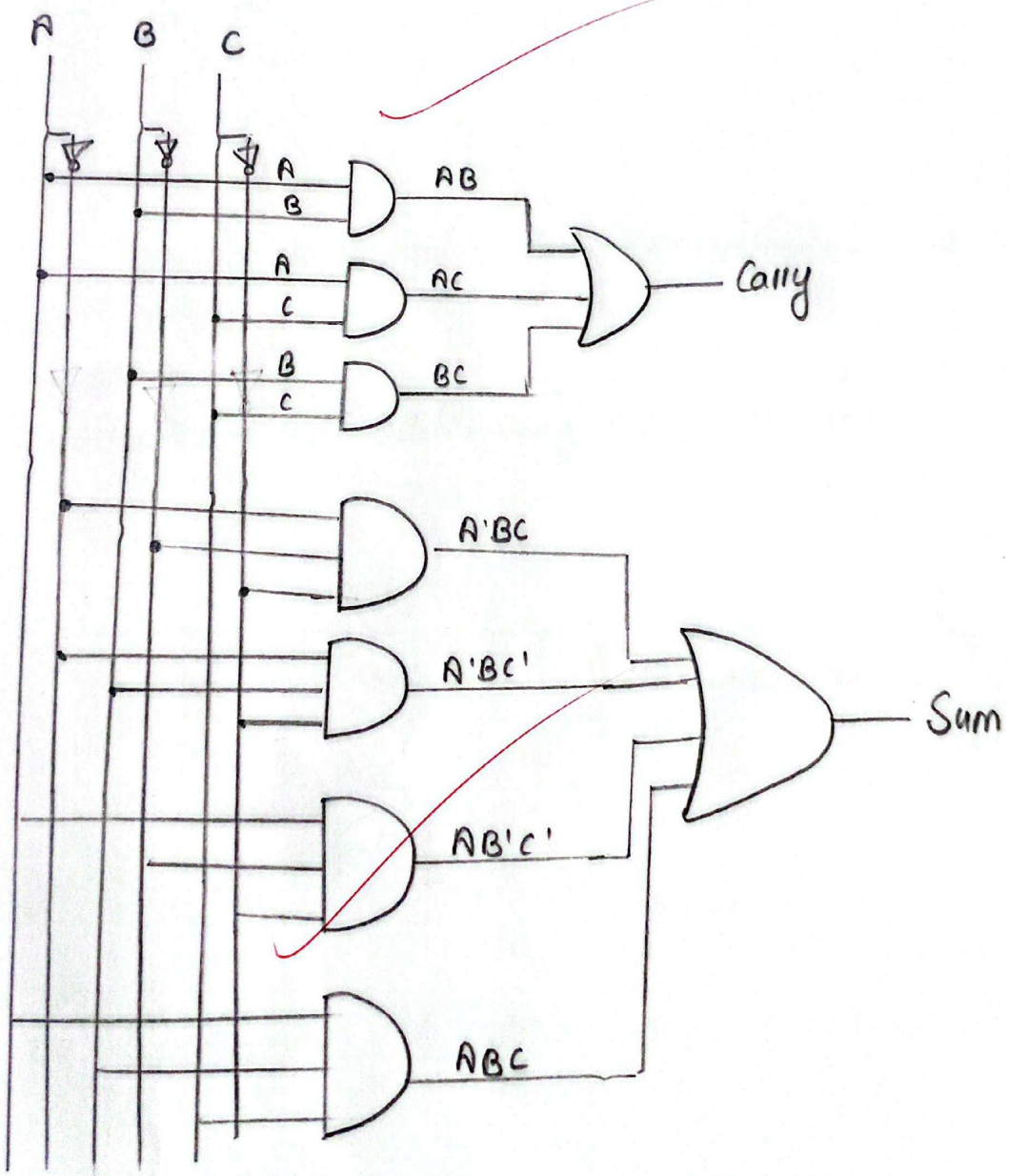

fig: Implementation of full-adder

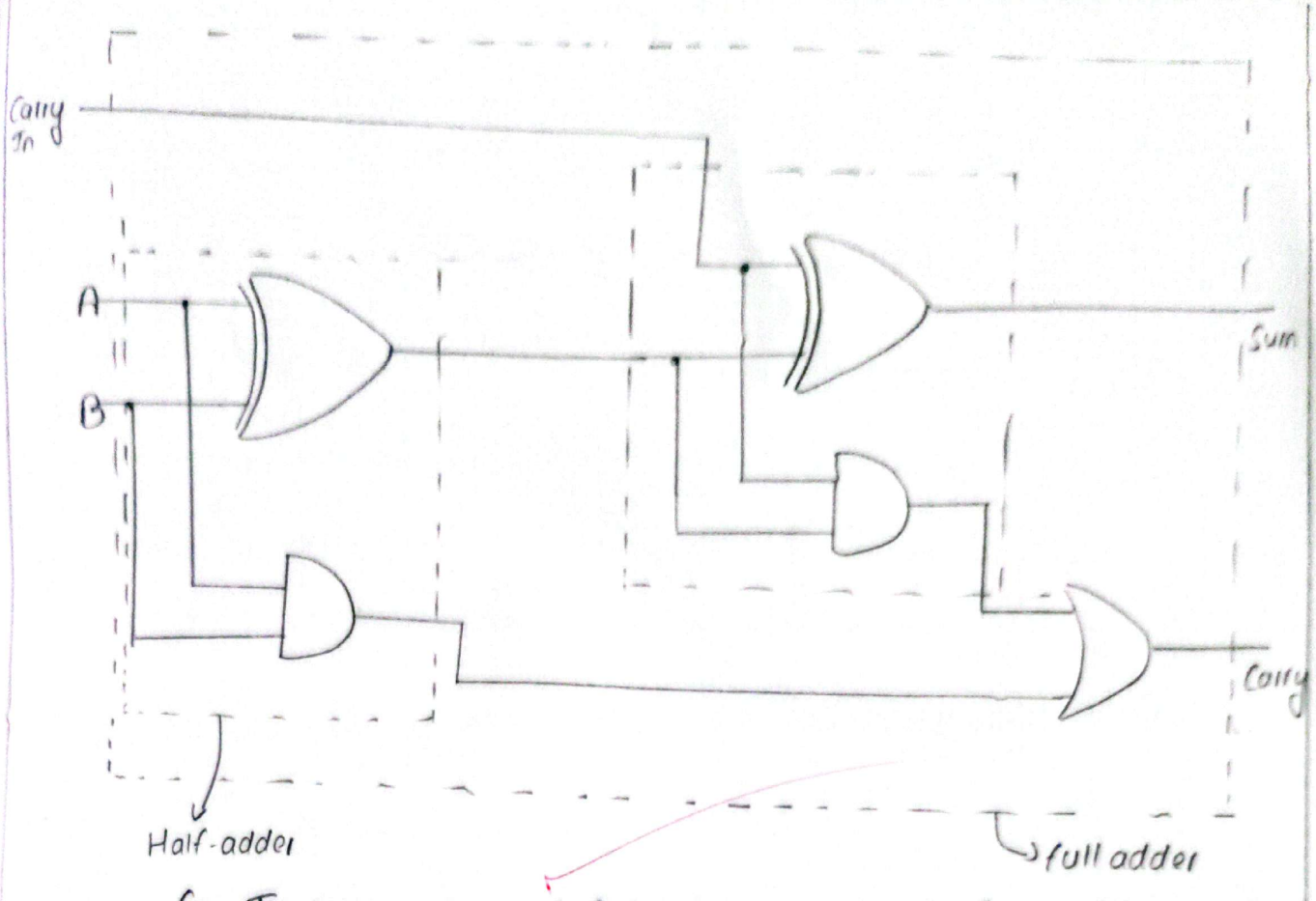

fig: Implementation of full-adder using two half adder and one OR gate

Observation

1) Investigate the half-adder using XOR & AND Gate

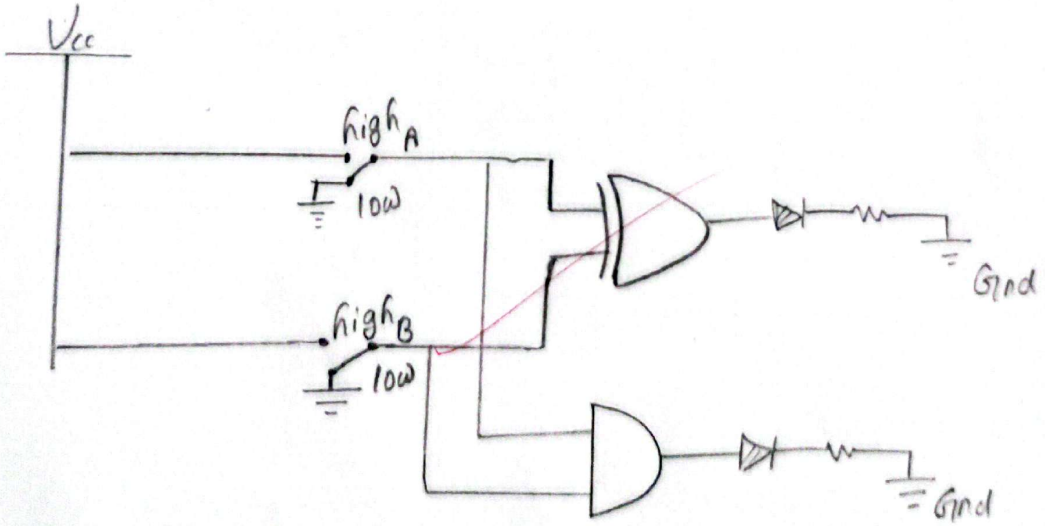

fig: Implementation of half-adder using XOR and AND Gates

Variables		expected Output		Observed Output	
A	B	Carry (c)	Sum (s)	Carry (c)	Sum (s)
0	0	0	0	0	0
0	1	0	1	0	1
1	0	0	1	0	1
1	1	1	0	1	0

1) Investigate the full-adder using two half-adder and OR Gate.

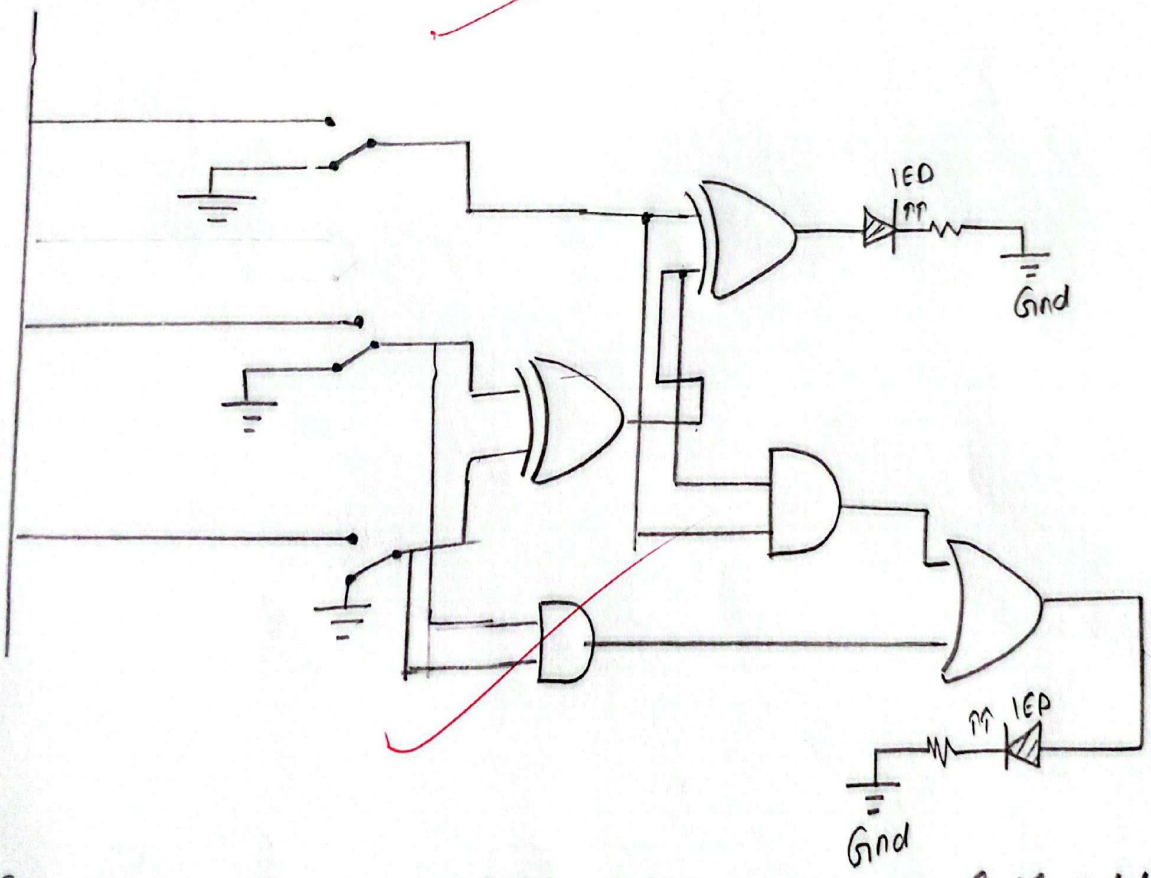

fig: Implementation of full-adder using two half-adder and OR Gate

Variable			Expected output		Observed output	
A	B	C	carry (c)	Sum (s)	carry (c)	sum (s)
0	0	0	0	0	0	0
0	0	1	0	1	0	1
0	1	0	0	1	0	1
0	1	1	1	0	1	0
1	0	0	0	1	0	1
1	0	1	1	0	1	0
1	1	0	1	0	1	0
1	1	1	1	1	1	1

Conclusion

In this experiment, we implement half-adder and full-adder. The outputs obtained for both circuit matched the expected truth table.

CamScanner